MINI LAND ROLLER
SPECIFICATIONS

MANDAKO

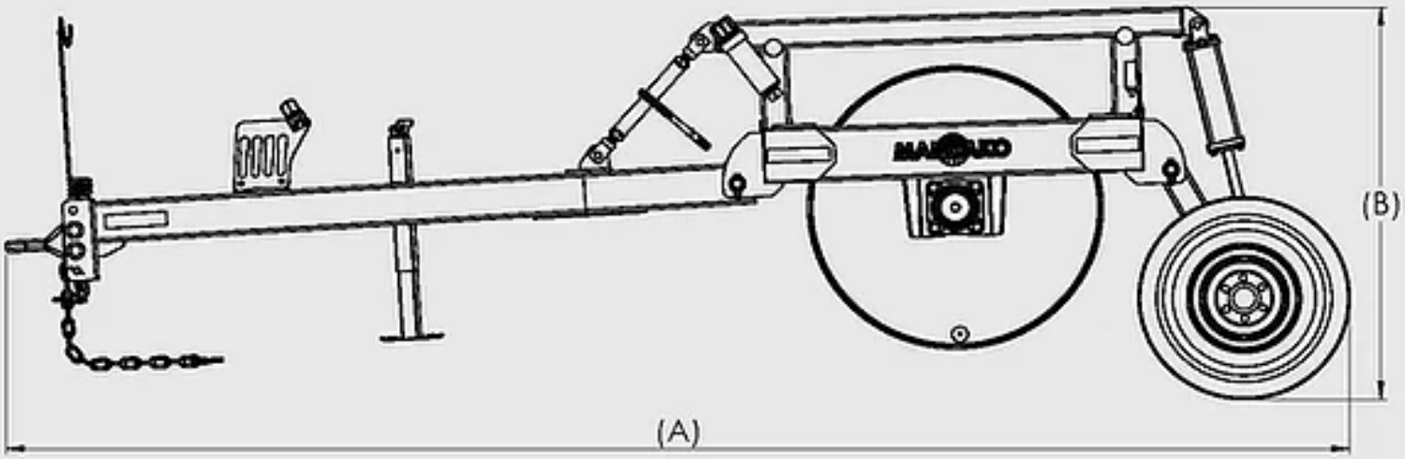

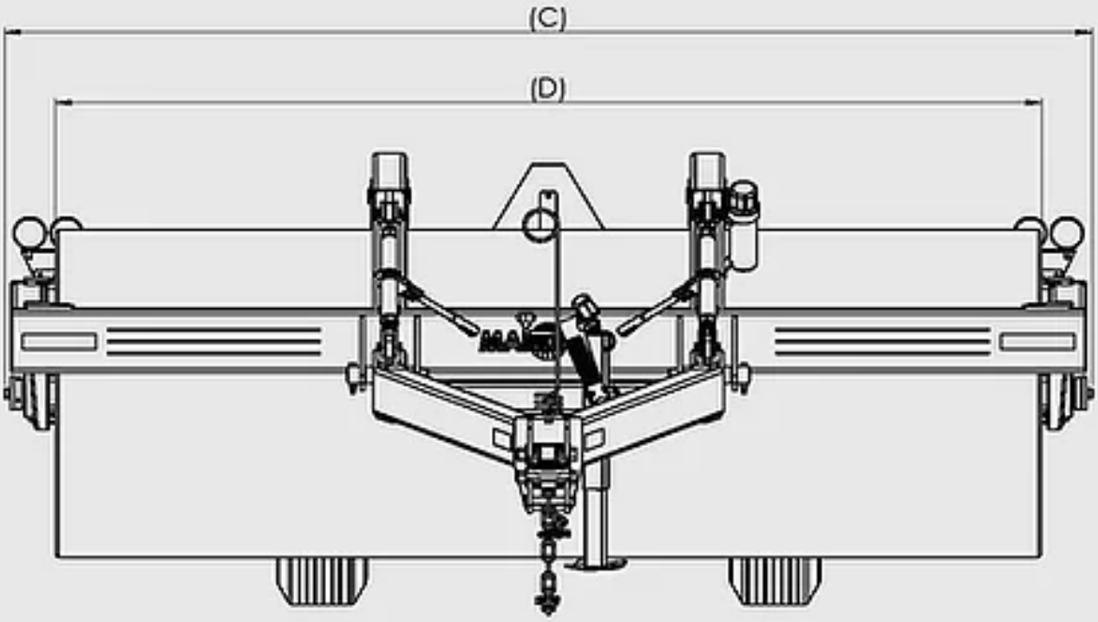

	Unit Size					
Dimension	6'	8'	10'	12'	15'	20'
Transport Length (A)	15'-11"	15'-11"	15'-11"	15'-11"	15'-11"	15'-11"
Overall Height (B)	5'	5'	5'	5'	5'	5'
Overall Width (C)	7'-2"	9'-2"	11'-1"	13'-1"	16'-1"	21'-1"
Working Width (D)	6'-1"	8'-1"	10'-1"	12'-1"	15'-1"	20'-1"
Hyd. Req. (@2800PSI)	5 GPM (19 LPM)	5 GPM (19 LPM)	5 GPM (19 LPM)	5 GPM (19 LPM)	5 GPM (19 LPM)	5 GPM (19 LPM)
Hyd. Req. (Ports)	1	1	1	1	1	1
Horsepower Req.	24+	32+	40+	48+	60+	80+
Approx. Weight (lbs/ft) 42" x 3/4" Drum	725	640	585	550	515	480
Drum Size	36" x 1/2" W | 42" x 5/8" W | 42" x 3/4" W					
Tire Size	ST235/80R16E 10 Ply	ST235/80R16E 10 Ply	ST235/80R16E 10 Ply	ST235/80R16E 10 Ply	ST235/80R16E 10 Ply	ST235/80R16E 10 Ply